INTEGRATION
ISS 170

2 way component

- Polyglass cone
- Reduced height

SPECIFICATIONS

Nominal power	60W	
Maximum power	120W	
Sensitivity (2,83V/1m)	91dB	
Cone	Polyglass	
Surround	Rubber	
Nom. impedance	4 Ohms	
DC resistance	3.28 Ohms	
VC diameter	30.5mm	1 3/16"
VC height	7.6mm	0 5/16"
Former	Glass Fiber	
Layers	2	
Wire	Copper	
Inductance	0.17mH	
Xmax	5mm	0 3/16"
Magnet d x h	80 x 15mm	3 1/8 x0 9/16"
Magnet weight	585g	1.17 lb
Flux density	1.1T	
Gap height	4mm	0 3/16"
Net weight	750g	1.5 lb

FREQUENCY RESPONSE/IMPEDANCE

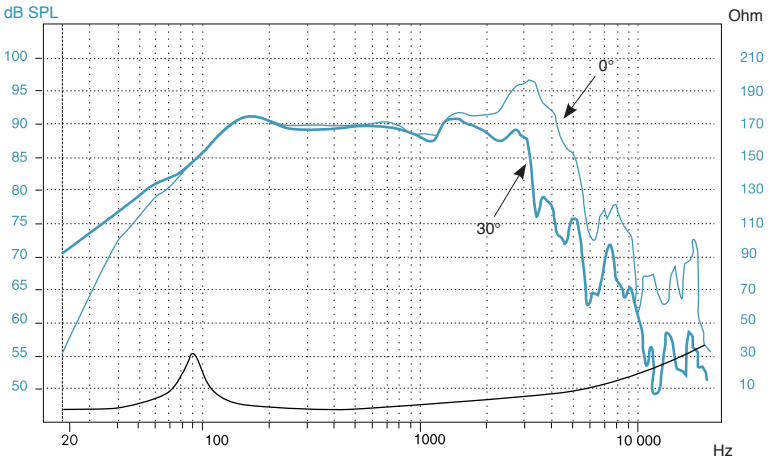

PARAMETERS

Fs	76.97Hz
Vas	8.13 l
Qts	0.68
Qes	0.81
Qms	4.29
Re	3.28 Ohms
Sd	126.68cm²
Cas	5.79 E-8m⁵/N
Mas	73.85kg/m⁴
Ras	8324.68 Ohms.ac
Cms	3.61E-4 m/N
Mms	11.85g
Rms	1.336kg/s
Ces	510.63mF
Les	8.37mH
Res	17.37 Ohms
Bl	4.82N/A
SPL	88.45dB (Re)

MECHANICAL DRAWING

Unit: mm

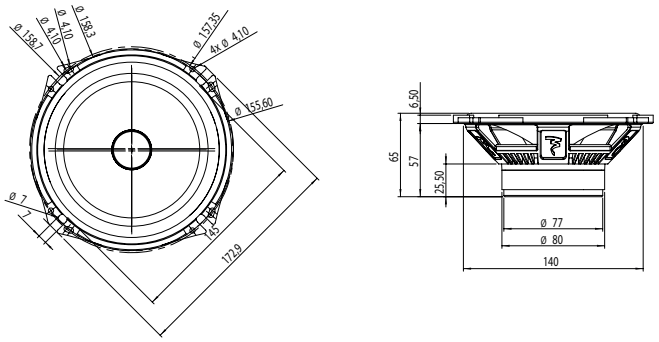

Integration
INSTANT GRATIFICATION

FOCAL®
THE SPIRIT OF SOUND

Focal® is a trademark of Focal-JMlab®-Tel. (33) 04 77 43 57 00 - www.focal.com - Images may not conform exactly to specific product. Photos L'Atelier Sylvain Madelon - SCEB-121203/1